LONG SEAMS

COURSE	ORIENTATION
1(TOP)	25°
2	0°

*VERT – TOP TO BOTTOM

Ship loose items:
NONE

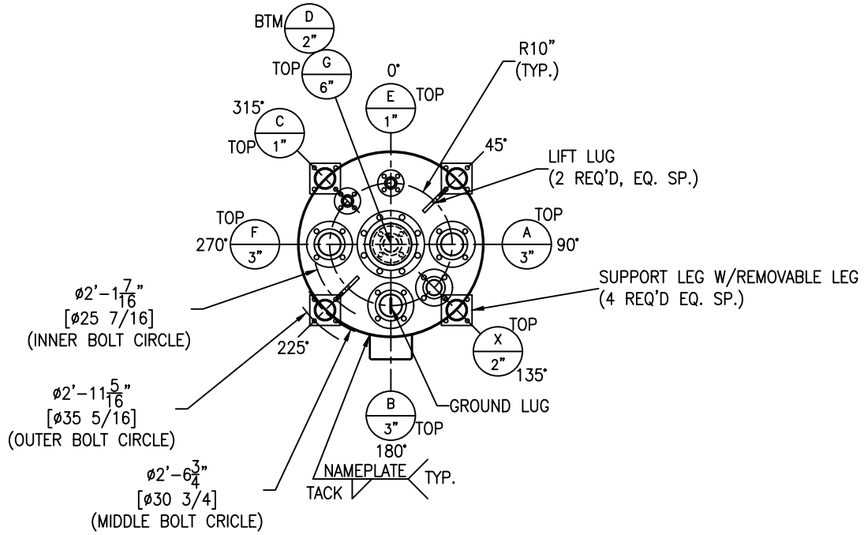

*NOTE: ALL ELEVATIONS ARE PULLED FROM WELD SEAM FOR EASE OF FABRICATION

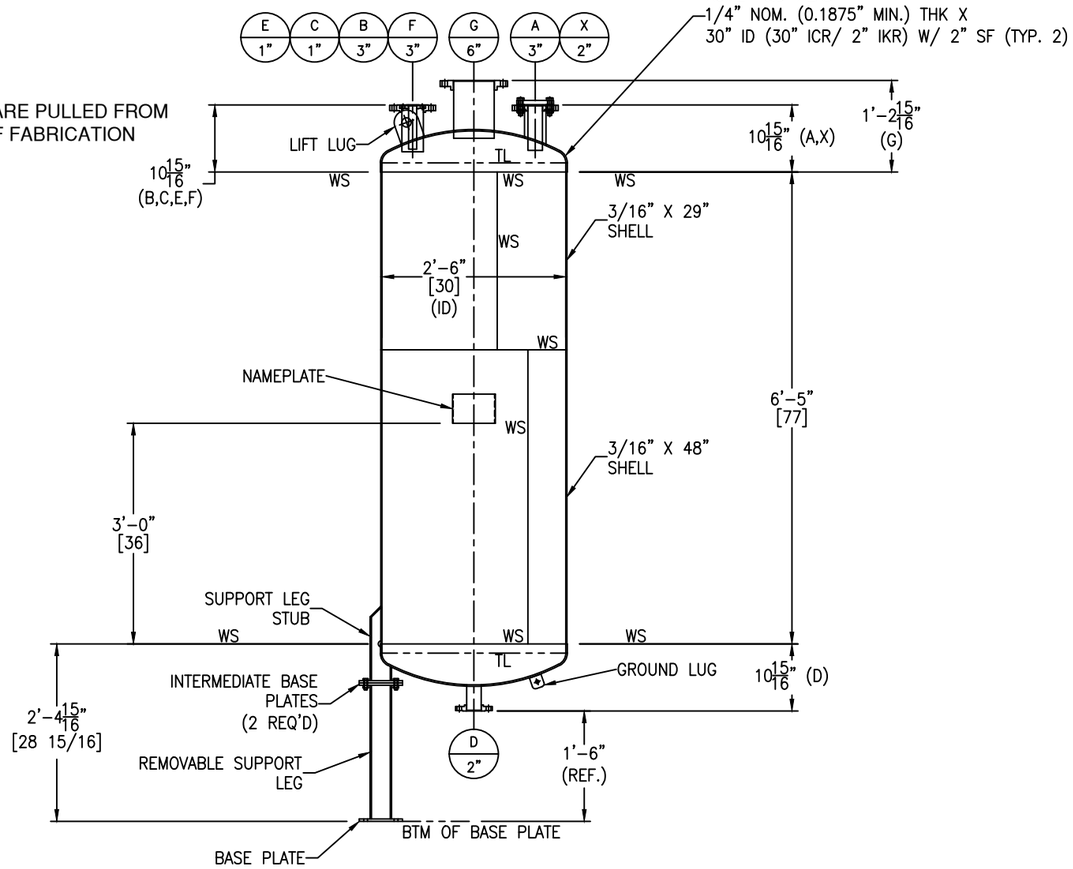

FC-14 GT-11

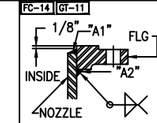

FIGURE NO. 1

FC-14 GT-11

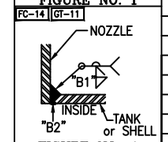

FIGURE NO. 4

FC-14 GT-11

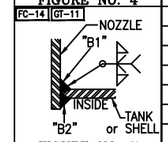

FIGURE NO. 7

FC-14 SA-30

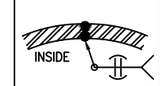

SHELL THK. < 5/16"

FIGURE NO. 9

FC-14 SA-30

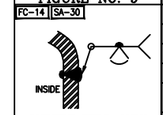

OUTSIDE WELD ONLY FOR HEADS
FIGURE NO. 11

NOZZLE SCHEDULE

MARK	SERVICE	SIZE	RATING	TYPE / STYLE	NECK SCHED.	PROJECTION EXT. (E)	PROJECTION INT. (MIN.)	WELD FIGURE	REPAD SIZE (WIDTH X THK.)	WELD SIZE "A1"	WELD SIZE "A2"	WELD SIZE "B1"	WELD SIZE "B2"	WELD SIZE "C1"	WELD SIZE "C2"
A	VENT	3"	150#	RFSO	40S	SEE DWG	–	1,4	–	1/4	5/16	1/4	1/8	–	–
B	PSV	3"	150#	RFSO	40S	SEE DWG	1"	1,7	–	1/4	5/16	1/4	1/8	–	–
C	GLOVEBOX RETURN	1"	150#	RFSO	40S	SEE DWG	1"	1,7	–	3/16	3/16	3/16	1/8	–	–
D	DIS OUT	2"	150#	RFSO	40S	SEE DWG	–	1,4	–	3/16	1/4	3/16	1/8	–	–
E	DIS IN	1"	150#	RFSO	40S	SEE DWG	1"	1,7	–	3/16	3/16	3/16	1/8	–	–
F	INSTRUMENTATION	3"	150#	RFSO	40S	SEE DWG	1"	1,7	–	1/4	5/16	1/4	1/8	–	–
G	ACCESS PORT	6"	150#	RFSO	40S	SEE DWG	1"	1,7	–	1/4	7/16	1/4	1/8	–	–
X	SPARE	2"	150#	RFSO W/BLIND	40S	SEE DWG	1"	1,7	–	3/16	1/4	3/16	1/8	–	–

MATERIALS OF CONSTRUCTION

	VESSEL
SHELL	SA240-316/316L
HEADS	SA240-316/316L
RIM ANGLE	–
NOZZLE NECKS	SA312-316/316L SMLS
NOZZLE FLANGES	SA182F-316/316L
MANWAY NECKS	–
MANWAY FLANGES	–
GASKETS	GARLOCK 3000
BOLTS/STUDS	SA193-B7 (ZINC PLATED)
NUTS	SA194-2H (ZINC PLATED)
REPADS	–
COUPLINGS	–
SUPPORTS/HOLD DOWNS	SA312-316/316L SMLS & SA240-316/316L
LIFTING LUGS	SA240-316/316L
VACUUM RINGS	–
INSULATION RINGS	–
GROUND LUG	SA240-316/316L
BAFFLE	–
LADDER	–
TANK CLIPS (LADDER)	–
HANDRAIL	–
HANDRAIL CLIPS	–
PLATFORM	–
PLATFORM CLIPS	–
DIPTUBE SUPPORT	–
JACKET SHELL	–
JACKET HEADS	–
JACKET NOZZLE NECKS	–
JACKET NOZZLE FLANGES	–

DESIGN DATA

	VESSEL
DESIGN AND FAB. CODE	ASME
CERT. STAMP REQ'D.	YES
DESIGN PRESSURE	100 PSIG/FV
DESIGN TEMPERATURE	350° F
MIN. DESIGN METAL TEMP.	-20° F @ 100 PSIG
OPERATING PRESSURE	15 PSIG
OPERATING TEMPERATURE	200° F
JOINT EFFICIENCY HEADS	0.70
JOINT EFFICIENCY SHELL	0.70
CORROSION ALLOWANCE	0"
SPECIFIC GRAVITY	2.80
EARTHQUAKE ZONE	Ss = (0.110) S1 = (0.053)
WIND LOAD	125 MPH
STRESS RELIEF	NOT REQ'D
RADIOGRAPHIC EXAM	NOT REQ'D
DYE PENETRANT EXAM	NOT REQ'D
MAGNETIC PARTICLE EXAM	NOT REQ'D
HYDROSTATIC TEST	130 PSIG / GAUGE #9
PNEUMATIC TEST	NOT REQ'D
JKT HYDRO TEST	–
JKT DESIGN AND FAB. CODE	–
JKT CERT. STAMP REQ'D.	–
JKT DESIGN PRESSURE	–
JKT DESIGN TEMPERATURE	–
JKT MIN. DESIGN METAL TEMP.	–
JKT OPERATING PRESSURE	–
JKT OPERATING TEMPERATURE	–
JKT JOINT EFFICIENCY HEADS	–
JKT JOINT EFFICIENCY SHELL	–

VESSEL FINISH

INTERIOR WELD TREATMENT:	SAV TANK STANDARD
EXTERIOR WELD TREATMENT:	SAV TANK STANDARD
SAV TANK FINISHING STANDARD:	SEE NOTE 6
INSULATION:	N/A
PAINTING:	N/A

VESSEL CAPACITY AND WEIGHTS

OPERATING CAPACITY	–
FULL CAPACITY	260 GAL.
EMPTY SHIPPING WEIGHT	900 LBS.
WEIGHT FULL OF WATER	3,100 LBS.
WEIGHT FULL OF PRODUCT	7,100 LBS.

ASME SECT. VIII, DIV. 1
2023 EDITION

ENG. _____ DATE: _____

Q.C. _____ DATE: _____

A.I. _____ DATE: _____

This drawing is issued for customer approval. please review, make approval changes (if any) in red. check the appropriate box, sign & date.

- ☐ Approval – no changes. Please proceed with fabrication.
- ☐ Approved as noted. Please proceed with fabrication
- ☐ Not approved. Please make changes and resubmit.

Customer signature _____ Date _____

GENERAL NOTES

1.) COVER ALL FLANGES, OPENINGS & MACHINED SURFACES PRIOR TO SHIPMENT UNLESS OTHERWISE NOTED.
2.) BOLT HOLES TO STRADDLE 0° & 180° UNLESS OTHERWISE NOTED.
3.) –
4.) ASME CODE VESSELS TO BE IN ACCORDANCE WITH UG-80 & UG-81. TOLERANCES: +/- 1/8" FOR DIMENSIONS AND +/- 2 DEGREES FOR ORIENTATIONS.
5.) ASME MATERIALS TO CONFORM TO THE FOLLOWING: FLANGES – B16.5, FITTINGS – B16.9 & COUPLINGS – B16.11.
6.) PICKLE ALL EXTERIOR WELDS. PASSIVATE INTERIOR & EXTERIOR OF VESSEL.

REVISIONS

REV	D.BY	C.BY	DATE	DESCRIPTION
2				AS BUILT
1	AD	–	10/17/25	CERTIFIED
0	AD	HP	10/7/25	APPROVAL

Savannah Tank & Equipment Corp.
1517 Telfair Road, Savannah, GA 31415
(912) 233-8902

DRAWN BY: AD
CHK'D BY: HP
APPROVED BY: NP
SCALE: 3/4" = 1'-0"

SIVANCE LLC
BULK TANK
EQUIP. #T-3405
CUST. PO #6701676868

DRAWING NO.: 096-25-1 SHT 1 OF 2 REV. SET 1

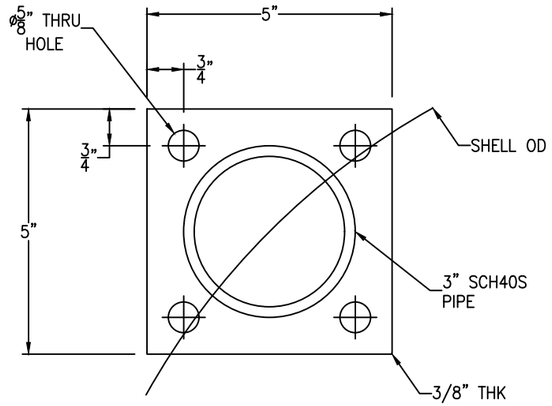

BASE PLATE DETAIL

(4 REQ'D) SCALE: 6" = 1'-0"

FC-14

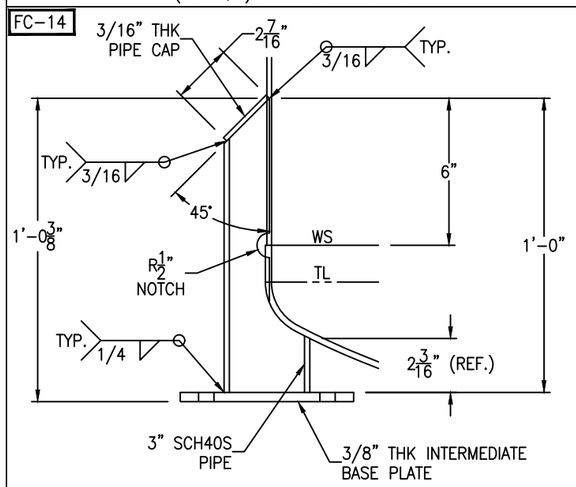

BASE PLATE TO BE BOLTED TO REMOVABLE LEG

STUB LEG DETAIL

(4 REQ'D) SCALE: 3" = 1'-0"

FC-14

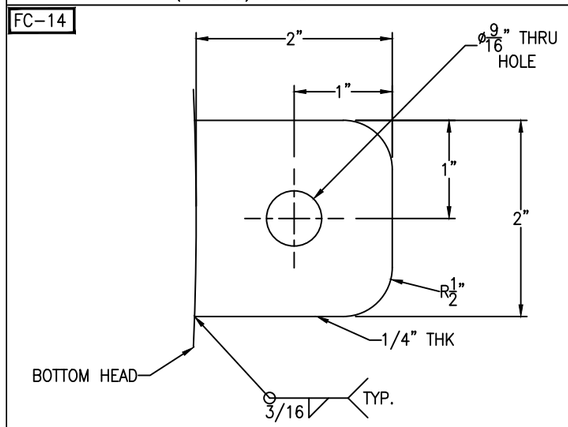

***GROUND LUG LOCATED @ 180°

GROUND LUG DETAIL

SCALE: 1'-0" = 1'-0"

FC-14

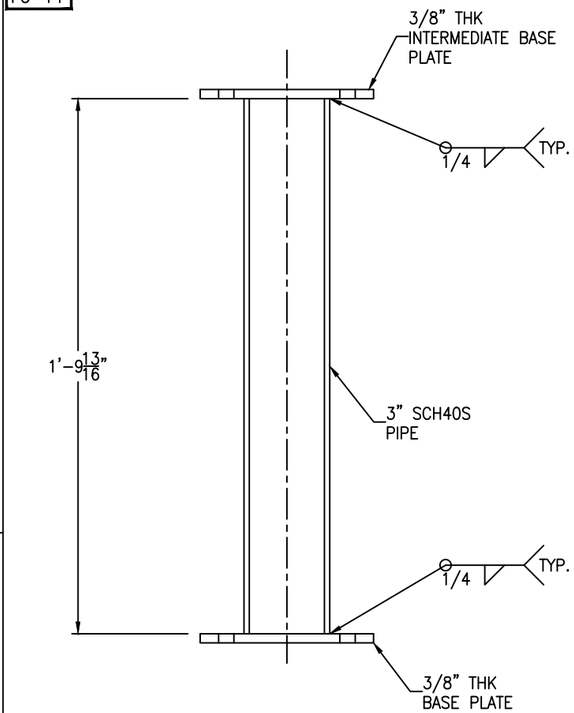

TOP BASE PLATE TO BE BOLTED TO STUB LEG

REMOVABLE LEG DETAIL

(4 REQ'D) SCALE: 3" = 1'-0"

FC-14

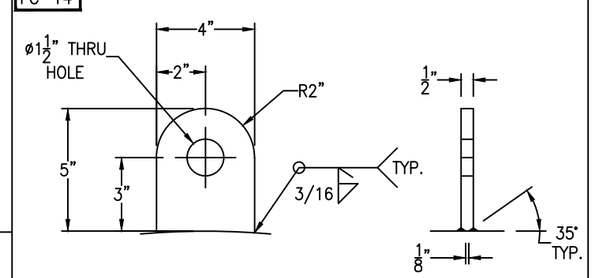

TANK WT. <= 5000#

SHACKLE PIN DIA. = 3/4"

LIFT LUG DETAIL

(2 REQ'D) SCALE: 3" = 1'-0"

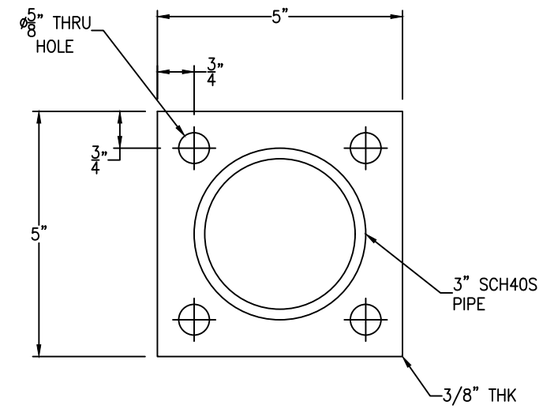

INTERMEDIATE BASE PLATE DETAIL

(8 REQ'D) SCALE: 6" = 1'-0"

Bolting for blinds
X: (4) 5/8"-11 NC x 2 1/2" HH BOLT
(4) 5/8"-11 NC HH NUT
(1) 2" 150# RING GASKET X 1/8" THK

Bolting for Intermediate base plate
(16) 1/2"-13NC x 1 1/2" HH BOLT
(16) 1/2"-13 NC HH NUT

REV	D.BY	C.BY	DATE	DESCRIPTION
2				AS BUILT
1	AD	–	10/17/25	CERTIFIED
0	AD	HP	10/7/25	APPROVAL

⚠ REVISIONS

Savannah Tank & Equipment Corp.
1517 Telfair Road, Savannah, GA 31415
(912) 233-8902

DRAWN BY: AD
CHK'D BY: HP
APPROVED BY: NP
SCALE: 3/4" = 1'-0"

SIVANCE LLC
BULK TANK
EQUIP. #T-3405
CUST. PO #6701676868

DRAWING NO.: 096-25-2 SHT 2 OF 2 REV. SET 1